Vinotemp®

WINE-MATE *Cooling Unit*

Use & Care Manual

VINO1500CD, CTED
VINO2500CD, CTED

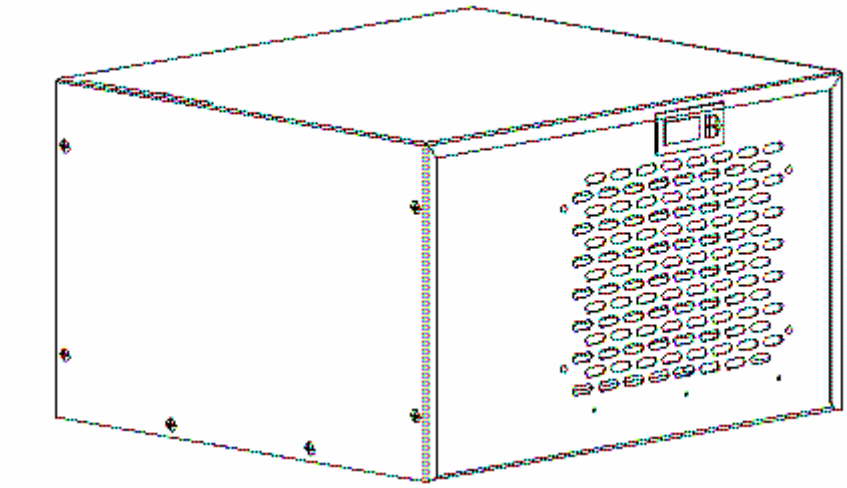

Vinotemp International Corp.

www.winemate.com

READ AND SAVE THESE INSTRUCTIONS

Important Safety Information

⚠ WARNING

To avoid the risk of electrical shock, property damage, personal injury or death:

- The power cord must be plugged into a 3-prong grounding-type wall receptacle, grounded in accordance with the National Electrical Code, ANSI/NFPA 70 - latest edition and local codes and ordinances.
- It is the personal responsibility of the consumer to have a proper 3-prong wall receptacle installed by a qualified electrician.
- DO NOT, UNDER ANY CIRCUMSTANCES, REMOVE THE POWER CORD GROUNDING PRONG.
- A separate adequately fused and grounded circuit should be available for this appliance.
- Do not remove any grounding wires from individual components while servicing, unless the component is to be removed and replaced. *It is extremely* important to replace all grounding wires when components are replaced.

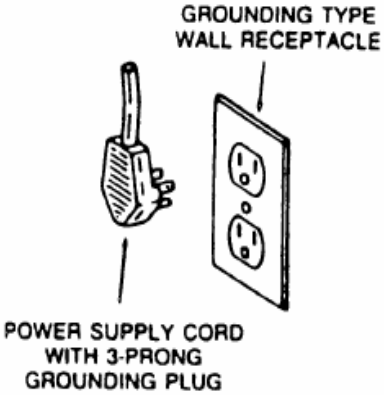

⚠ WARNING

ELECTRIC SHOCK HAZARD

Disconnect electric supply from appliance before servicing.

Replace all panels before operating.

Failure to do so could result in death or electrical shock.

- **DO NOT PLUG IN UNTIL 24 HOURS AFTER DELIVERY.**
- **DO NOT USE A GROUND FAULT INTERRUPTER (GFI).**
- **A DEDICATED 15 AMPCIRCUIT IS HIGHLY RECOMMENDED.**

TABLE OF CONTENTS

Feature Description……..3

Installation Instruction……..5

Temperature Control & Humidity Adjustment……9

Care Guide……13

Troubleshooting……14

Wiring Diagram……17

Customer Support……18

Warranty……19

Feature Description

- VINO1500CD, CTED and VINO2500CD, CTED cooling units are designed and used to provide a subtle temperature between 50~65 °F for suitable space at a normal environment.
- The refrigerated space will maintain humidity of 50~70% RH even when the environment becomes dry and humid.
- These temperatures and humilities are optimized for long term storage of wine.
- Bottom cold-air supply is optimized for use in the wine cabinets.
- Multiple options for top and rear hot air exhaust
- Self-contained ready for use and easy for installation

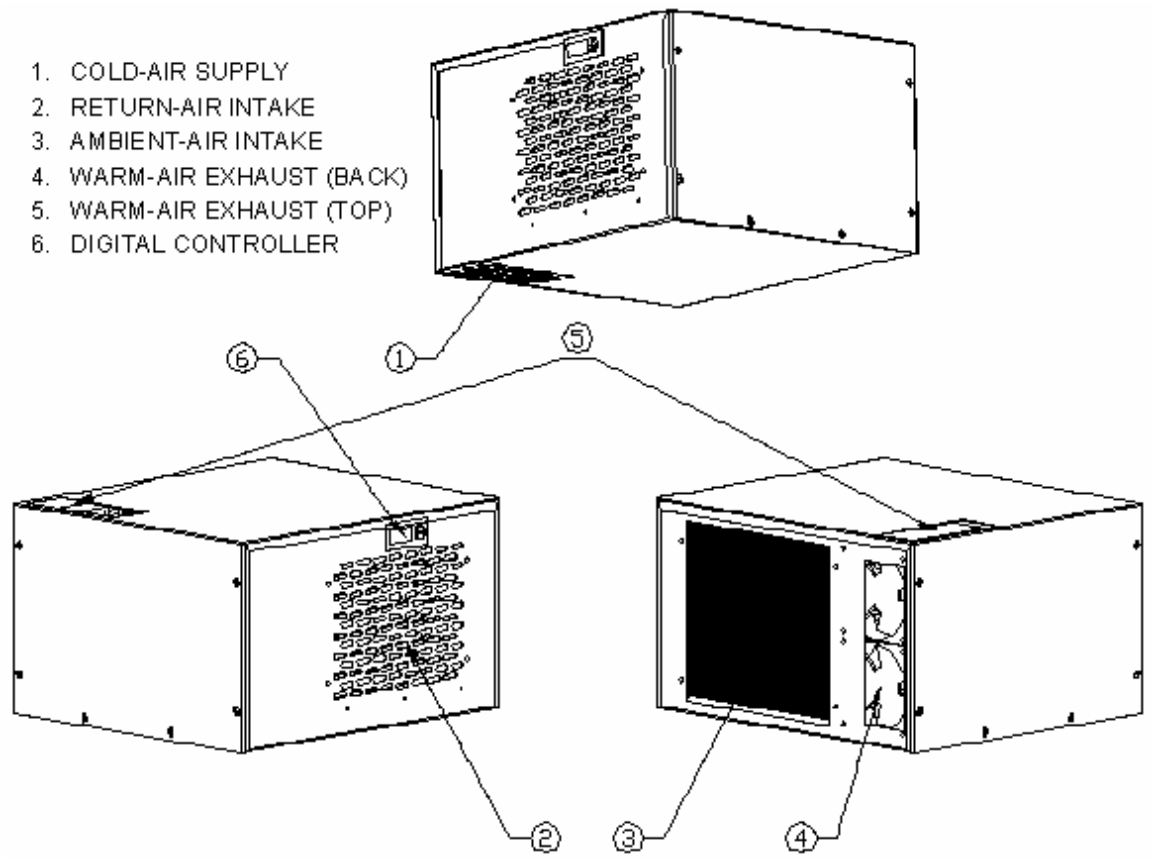

Fig. 1.1 FEATURES

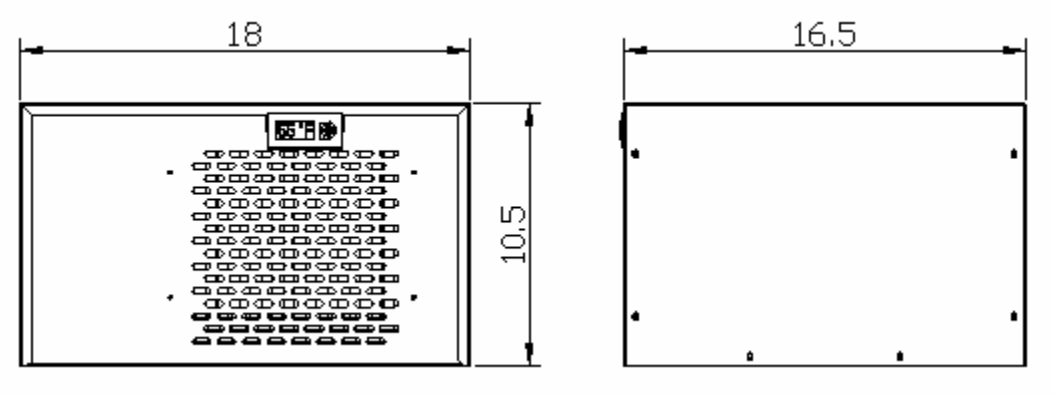

Fig. 1.2 DIMENSIONS (in)

The dimension and capacity are specified as follows:

Model	Exhaust	Cooling Capacity, CFM 55°F/ 75°F	Bottle Capacity 55°F/ 75°F		Electrical	Weight
1500cd	Rear Exhaust	1500 Btu/h, 120 CFM	150 cu ft	800 bottles	115V/60Hz 4A	50 lb
1500cted	Top Exhaust	1500 Btu/h, 120 CFM	150 cu ft	800 bottles	115V/60Hz 4A	50 lb
2500cd	Rear Exhaust	2500 Btu/h, 180 CFM	250 cu ft	1200 bottles	115V/60Hz 5A	55 lb
2500cted	Top Exhaust	2500 Btu/h, 180 CFM	250 cu ft	1200 bottles	115V/60Hz 5A	55 lb

- **See the voltage, frequency and current specified on the label at the cooling unit.**

Installation Instruction

1. Cabinet Location

- Place the wine cabinet in a properly ventilated location. Otherwise, heat exhausted by the cooling unit will build up and it will not operate properly.
- The exhaust area must not be a closed space and must be ventilated. The ambient temperatures shall not be higher than 90 °F or lower than 50 °F.

1) Rear Exhaust Location
- Leave min 6 “clearance from the rear to the wall.
- Leave min 12” clearance from the top to the ceiling.
- Leave min 6” clearance from the left and right sides.

2) Front Exhaust Location
- Leave min 6” clearance from the front if left and right sides unobstructed.
- Or, leave min 36” clearance from the front if left and right sides obstructed

3) Top Exhaust Location
- Leave min 12” from the top to the ceiling.
- Leave min 2 “clearance from the rear to the wall.
- Leave min 2” clearance from the left and right sides.

4) Side Exhaust Location
- Leave min 6 “clearance from the left or right side to the wall.
- Leave min 12” clearance from the top to the ceiling.

2. Cooling Unit Installation

- The cooling unit produces cooling supplied into the cabinet, and it also generates heat that must be exhausted outside the cabinet. So the supply side and exhaust side must be separated and sealed (see Fig. 2.1).
- Cut a rectangular inside opening at the rear of the cabinet with the 1/4” clearance inwards to the width and height of the cooling unit. By not going through, leave 1/2” lip inside at the wall to place the gaskets (see Fig. 2.2).
- If top exhaust, cut another rectangular opening at the top of the cabinet to the length and width of the top exhaust (see Fig.2.2).
- Make 2 holes at the ceiling to install the 1/4 inside diameter wood thread inserts (see Fig.2.2).
- Place the gaskets (1/2” foam tape)on the gasket lips (see Fig 2.1).
- If top exhaust, place another gaskets along the top exhaust at the top of the cooling unit (see Fig.2.3).
- Move the cooling unit towards the mounting sides and push to press the gaskets.
- Fasten the 2 brackets and use 7/16” wrench to tighten the two ¼” screws (see Fig 2.1).

- Attach the exhaust and fresh air grille with screws from the rear side of the cabinet.
- If top exhaust, install another top exhaust grille at the top of the cabinet.
- Plug the cooling unit in receptacle.
- Plug the wine cabinet.

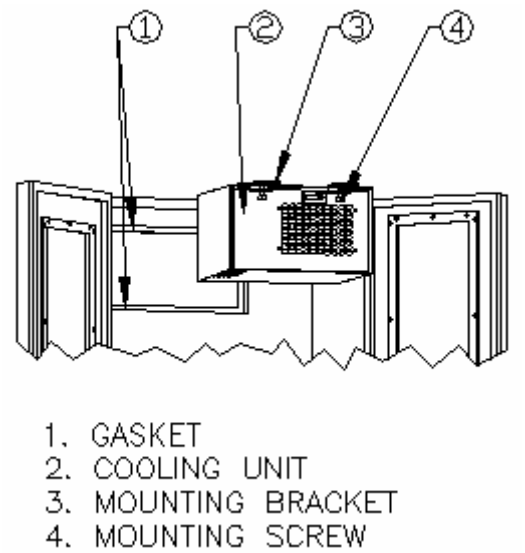

Fig. 2.1 COOLING UNIT MOUNTING

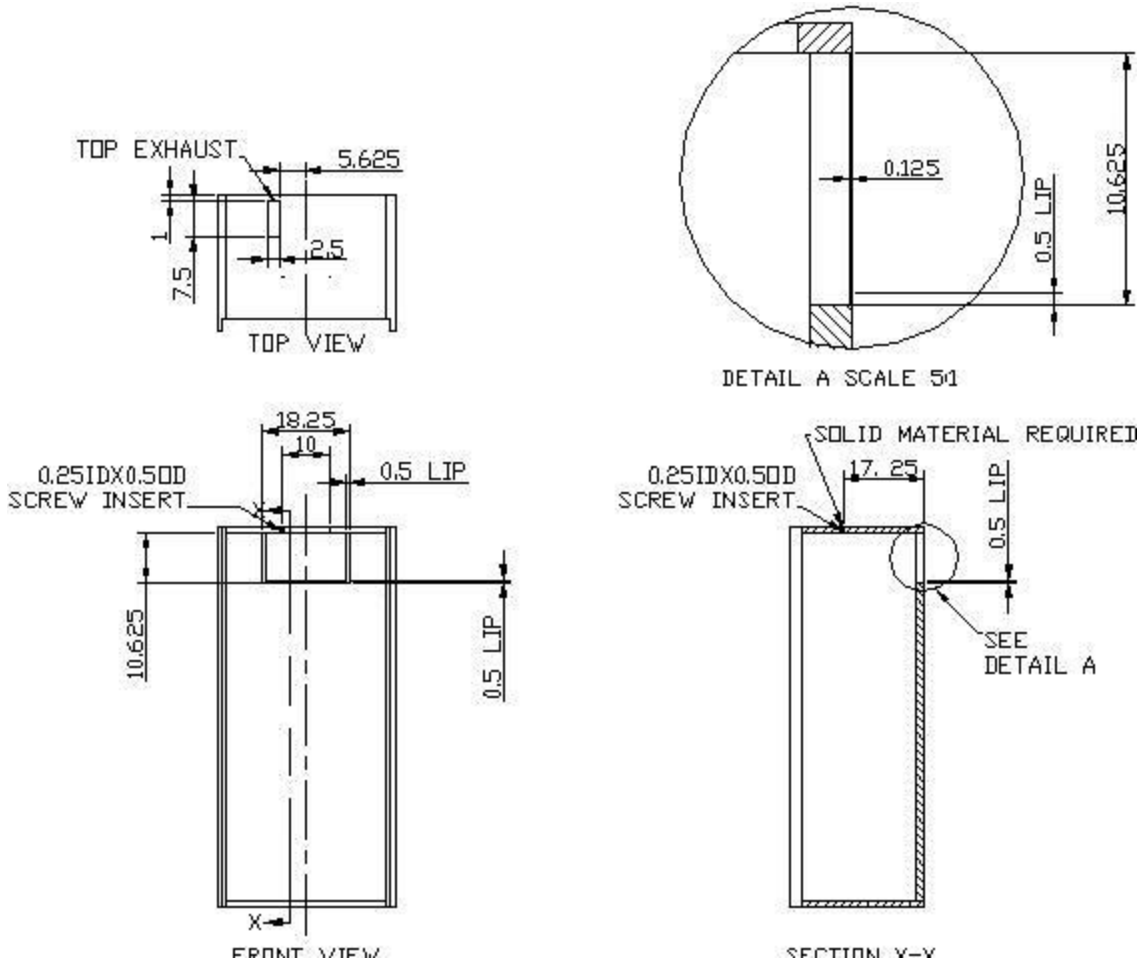

Fig. 2.2 MOUNTING CUTOUT & GASKET LIPS

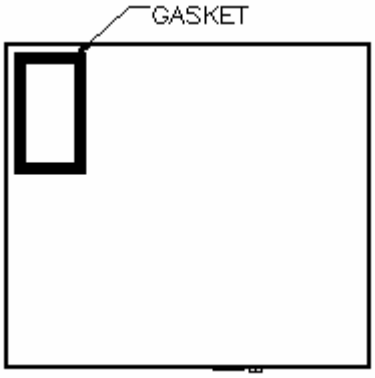

Fig. 2.3 TOP EXHAUST GASKET

NOTES:

1) **DO NOT INSTALL ANY DUCTS ONTO THE SUPPLY, INTAKE ANY EXHAUST.**
2) **MOUNTING BRACKETS, SCREWS, GASKETS AND OTHER SEAL MATERIALS ARE NOT INCLUDED.**

2. Electrical Cord

- We strongly recommend against the use of an extension cord. However, if you still select to use an extension cord, it is absolutely necessary that it is a UL LISTED 3-wire grounding type appliance extension cord. The marked rating of the extension cord shall be 115 V, 15 A. or equivalent and not greater than 15ft in length.

Temperature Control & Humidity Adjustment

1. **Temperature Setting**

- **Set the temperature at 55 °F for the optimum aging of wine**
- **On initial start-up, the time required to reach the desired temperature will vary, depending on the quantity of bottles, temperature setting and surrounding temperature.**
- **Allow 24 hours to stabilize the temperature for each new temperature setting operation**

2. **Use of the controller**

Fig. 3.1 DIGITAL CONTROLLER

1) Display

During normal operating conditions, the display shows the value measured by the air regulation probe. In case of active alarm, the temperature flashes alternately to the code alarm.

1.1 LED Functions

LED	MODE	FUNCTION
❄	ON	Compressor enabled
❄	Flashing	Anti-short cycle delay enabled
❄	ON	Defrost enabled
(!)	ON	An alarm is occurring
°C/°F	ON	Measurement unit
°C/°F	Flashing	Programming phase

1.2 Front Panel Commands

SET: To display target set point; in programming mode it selects a parameter or confirm an operation.

(DEF) To start a manual defrost

(**UP**): To see the max. stored temperature; in programming mode it browses the parameter codes or increases the displayed value.

(**DOWN**) To see the min stored temperature; in programming mode it browses the parameter codes or decreases the displayed value.

To turn ON or OFF the controller (if enabled)

KEY COMBINATIONS:

+	To lock & unlock the keyboard.
SET +	To enter in programming mode.
SET +	To return to the room temperature display.

2) Alarm Signals

2.1 Code Description

Message	Cause	Outputs
"P1"	Room probe failure	Compressor output acc. to par. "Con" and "COF"
"HA"	Maximum temperature alarm	Outputs unchanged.
"LA"	Minimum temperature alarm	Outputs unchanged.
"CA"	Serious external alarm (i1F=bAL)	All outputs OFF.

2.2 Alarm Recovery

Probe alarms P1", start a few seconds after the fault in the related probe; they automatically stop a few seconds after the probe restarts normal operation. Check connections before replacing the probe. Temperature alarms "HA", "LA" automatically stops as soon as the temperature returns to normal value. Alarm "CA" (with i1F=PAL) recovers only by switching off and on the instrument.

3) Temperature Set-Point

3.1 How to see the set-point

1. Push and immediately release the SET key: the display will show the Set-point;
2. Push and immediately release the SET key or wait for 5 seconds to display the probe value again.

3.2 How to change the set-point

1. Push the SET key for more than 3 seconds to change the Set point value;

2. The value of the set point will be displayed and the "°C" or "°F" LED starts blinking;
3. To change the Set value, push the keys ⌃ or ⌄ arrows within 10s.
4. To memorize the new set point value, push the SET key again or wait 10s.

4) Humidity Adjustment

The parameter **Fon** is used to adjust the humidity in the wine cabinet. The higher value of **Fon**, the higher relative humidity will be.
1. Press the **Set** +⌄ keys for 3 sec until the "**°C" or "°F"** LED starts blinking.
2. Release the keys, then push again the **Set** +⌄ keys for more than 7sec, the **Pr2** label will be displayed.
3. Release the keys, select the required parameter **Fon** by up or down keys⌃⌄.
4. Press the "**SET**" key to display its value.
5. Use up or down keys⌃⌄ to change its value.
6. The default value is 0, change high or low value to maintain high or low humidity.
7. Press "**SET**" to store the new value.
8. **To exit**: Press **SET +** ⌃ or wait 15sec without pressing a key.

5) Regulation Differential

The parameter **Hy** is used as intervention differential for set point. Compressor cut-in is the set-point + **Hy**, and compressor cut-out is the set-point.
1. Press the **Set** +⌄ keys for 3 sec until the "**°C" or "°F"** LED starts blinking.
2. Release the keys, then push again the **Set** +⌄ keys for more than 7sec, the **Pr2** label will be displayed.
3. Release the keys, HY will display immediately.
4. Press the "**SET**" key to display its value.
5. Use up or down keys⌃⌄ to change its value.
6. The default value is 4, change high or low value to result in long high or short running cycle.
7. Press "**SET**" to store the new value.
8. **To exit**: Press **SET +** ⌃ or wait 15sec without pressing a key.

6) Defrost Cycle

The parameter **IdF** is used as interval between defrost cycles.
1. Press the **Set** +⌄ keys for 3 sec until the "**°C" or "°F"** LED starts blinking.
2. Release the keys, then push again the **Set** +⌄ keys for more than 7sec, the **Pr2** label will be displayed.
3. Release the keys, select the required parameter **IdF** by up or down keys⌃⌄.
4. Press the "**SET**" key to display its value.
5. Use up or down keys⌃⌄ to change its value.
6. The default value is 24, change high or low value to result in less or more defrost cycle.
7. Press "**SET**" to store the new value.
8. **To exit**: Press **SET +** ⌃ or wait 15sec without pressing a key.

7) Manual Defrost

Push the DEF key for more than 2 seconds and a manual defrost will start.

Care Guide

⚠ WARNING

Always check wiring harness connections before initiating any test procedures.

Disconnect electric power from the appliance before performing any maintenance or repairs.

Voltage checks should be made by inserting meter probes beside the wires in the connector blocks with the electric power source on and the connector block plugged in.

Resistance checks should be made on components with the electric power off and the connector block disconnected.

⚠ WARNING

ELECTRIC SHOCK HAZARD

Disconnect the electrical power before servicing any components.
Failure to do so can result in death or electrical shock.

I

I. Condenser Coil Cleaning

- The condenser coil is on the ambient air intake side of the cooling unit.
- Clean the condenser coil regularly. Coil may need to be cleaned at least every 6 months.
- Unplug the cooling unit or disconnect power.
- Use a vacuum cleaner with an extended attachment to clean the coil when it is dusty or dirty.
- Plug the cooling unit or reconnect power.

II. Moisture Removing

- Remove the extra condensate if it is accumulated in the wine cabinet at humidity condition.

Troubleshooting

This Troubleshooting Chart is not prepared to replace the training required for a professional refrigeration service person, not is it comprehensive

Troubleshooting Chart

Complaint	Possible Causes	Response
1.Unit not running	a. Power cord unplugged b. No power to unit c. Setting higher than ambient temperature d. Differential too high e. Incorrect or loose wirings f. Low voltage g. Defrost light blinking h. Compressor light blinking	a. Check for power cord plug b. Check power at receptacle & fuses c. Lower temperature setting d. Decrease the value as to 4 °F e. Check all wirings and connections f. Contact an authorized electrician g. Unit is under defrost mode h. Unit waits for anti-short cycle delay
2.Fan running continually	a. Post-compressor fan running mode for humidity modulation	a. See 4) to set FON = 0
3.Temperature fluctuating	a. Air sensor	a. When using an air sensor, the wine bottle temperature is mainly controlled by the average air temperature. If the set-point is 55°F with the differential 4F, the cooling unit turns on at 59°F of air temperature and turns off at 55°F of air temperature. The average air temperature is 57°F, and then the wine temperature is around 57+/-0.5°F. The air is light enough to change so quickly that it maintains relatively constant average temperature that would prevent wine bottle temperature from varying.
4.Temperature high, unit stopping and starting but short running time	a. Displaying 55°F, air sensor contacting the evaporator or in the supply air b. Setting too high	a. Move the air sensor away from the evaporator and supply air b. Lower setting
5. Temperature high, compressor stopping and starting but short running time	a. Incorrect voltage b. Failed thermistor c. Failed components d. Improper condenser airflow e. Dirty condenser f. Overcharge of refrigerant g. Discharge or suction pressure too high	a. Check for voltage b. Check thermistor by placing it in ice water and measuring resistance c. Check compressor windings, start relay and overload protector. d. Check for condenser fan e. Clean condenser f. Call service for removing refrigerant g. Call service for OEM information

6. "HA" alarm blinking and beeping, temperature high or not cooling and running continually	a. Improper room insulation & seal b. Room too large c. Ambient temperature too high d. Exhaust restricted e. Malfunctioning fans f. Improper evaporator or condenser airflow g. Dirty Condenser h. Iced evaporator i. Refrigeration system restriction j. Refrigerant leak k. Undercharge or overcharge l. Failed components	a. Check for insulation, gasket and door opening b. Check for excessive size c. Check for installation location d. Leave minimum 3 feet clearance for the exhaust side and leave minimum 1 foot clearance for the fresh air intake side e. Check for both evaporator and condenser fans f. Check for air restrictions g. Clean condenser h. Defrost and reset temperature i. Call service for checking restrictions j. Call service for checking loss of refrigerant k. Call service to add or remove refrigerant l. Check compressor windings, start relay and overload protector
7.Unit running too long	a. Improper room insulation & seal b. Exhaust restricted c. Room too large d. Ambient temperature higher > 90°F e. Dirty Condenser	a. Check for insulation, gasket and door opening b. Leave minimum 3 feet clearance for the exhaust side and leave minimum 1 foot clearance for the fresh air intake side c. Check for excessive size or increase setting d. Check for installation location or increase setting e. Clean condenser
8.Fan motor running but compressor not running	a. Post-compressor fan running mode b. Incorrect power supply c. Incorrect or loose wirings d. Failed components e. Liquid refrigerant in the compressor	a. Check for fan running time FON b. Check for proper voltage c. Check all wirings and connections d. Check start relay, start capacitor, overload protector, compressor. e. Call service for OEM information.
9.Compressor running but fan not running	a. Fan blade stuck b. Incorrect or loose wirings c. Failed motors	a. Check for proper clearance b. Check all wirings c. Call service for checking open or shorted windings
10.Evaporator Icing	a. Evaporator air flow restriction b. Not stopping due to air leak, high ambient temperature or low setting c. Low ambient temperature d. Bad thermostat or sensor e. Moisture in the system	a. Check for fans b. Check for seal, door opening, ambient temperature and setting c. Defrost unit d. Check for thermostat and sensor e. Working initially then stopping

	f. Refrigerant low or leaking g. Capillary tube blockage	f. Check for current and sealed system leakage g. Check for low side pressure
11.Water leak	a. High humidity b. Air leak in wine cellar c. Evaporator air flow restriction d. Water passages restricted e. Drip tray leak	a. Use drain line b. Check for any air leak c. Check air flow or air TD crossing evaporator d. Clean the drip tray e. No water overflow but leak
12.Circuit tripping	a. Incorrect fuse or breaker b. Incorrect wirings c. Failed components	a. Check for proper fuse or breaker b. Check for wirings and connections c. Call service
13.Noisy operation	a. Mounting area not firm b. Loose parts c. Compressor overloaded due to high ambient temperatures or airflow restriction d. Malfunctioning components	a. Add support to improve installation b. Check fan blades, bearings, cabinet washers, tubing contact and loose screws. c. Check for airflow blockage d. Call service for checking internal loose, inadequate lubrication and incorrect wirings

Wiring Diagram

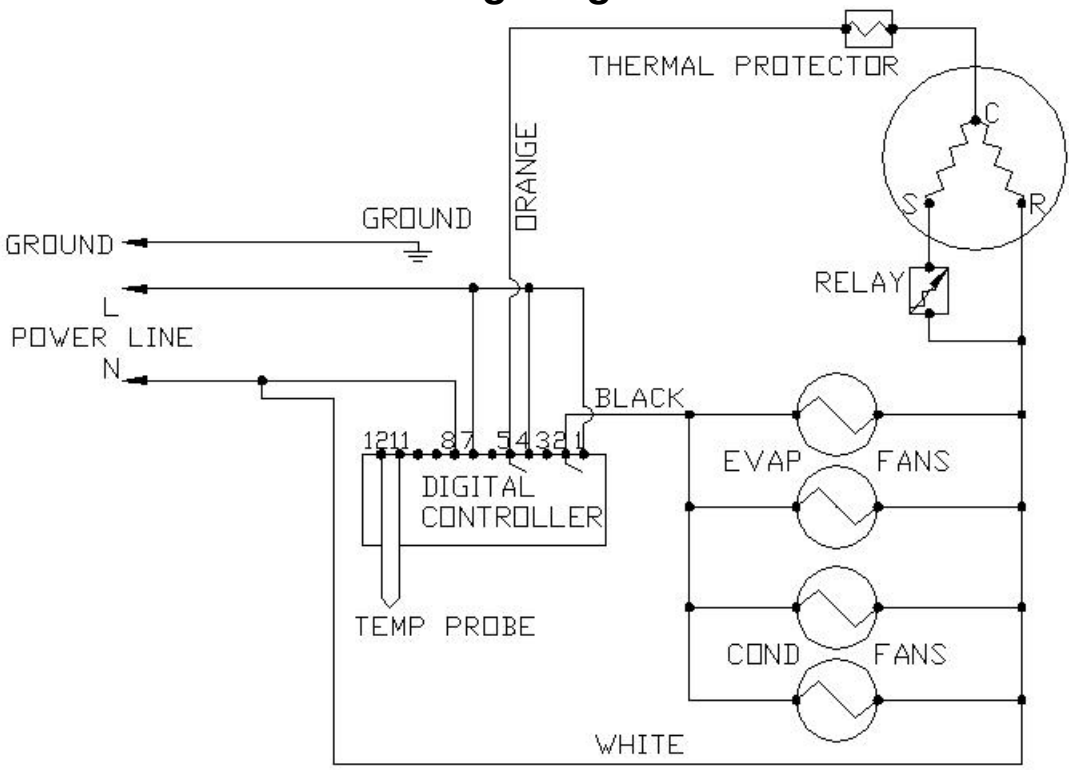

Fig. 6.1 WIRING DIAGRAM

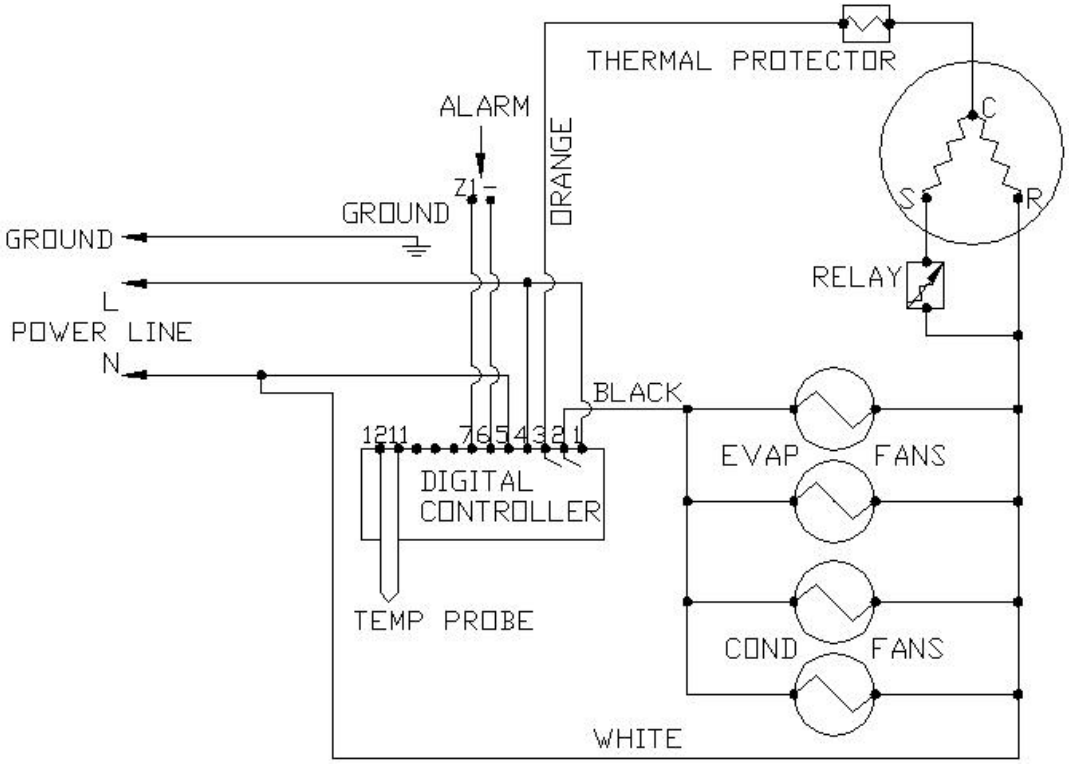

Fig. 6.2 CALLING FEATURE WIRING DIAGRAM

Customer Support

If you still have problems, please contact us at:

Vinotemp International
17631 South Susana Road
Rancho Dominguez, CA 90221
Tel: (310) 886-3332
Fax: (310) 886-3310
Email: info@vinotemp.com

Warranty

Thank you for choosing a Vinotemp cooling unit.

Please enter the complete model and serial numbers in the space provided:

Model_____
Serial No._____

Attach your purchase receipt to this owner's manual.

1. Limited Warranty

VINOTEMP warrants its products to be free from defects due to workmanship or materials under normal use and service, for twelve months after the initial sale. If the product is defective due to workmanship or materials, is removed within twelve months of the initial sale and is returned to VINOTEMP, in the original shipping carton, shipping prepaid, VINOTEMP will at its option, repair or replace the product free of charge. Additionally VINOTEMP warrants all parts to be free from defects for a period of sixty months after initial sale.

This warranty constitutes the entire warranty of the VINOTEMP with respect to its products and is in lieu of all other warranties, express or implied, including any of fitness for a particular purpose. In no event shall VINOTEMP be responsible for any consequential damages what is so ever. Any modification or unauthorized repair of VINOTEMP products shall void this warranty.

Service under Warranty

This service is provided to customers within the continental UNITED STATES only. VINOTEMP cooling units are warranted to produce the stated number of BTU/H. While every effort has been made to provide accurate guidelines, VINOTEMP can not warranty its units to cool a particular enclosure.

In case of failure, VINOTEMP cooling units must be repaired by the factory or its authorized agent. Repairs or modifications made by anyone else will void the warranty.

Shall a VINOTEMP cooling unit fail, contact the dealer for instructions, do not return the unit to the factory without authorization from VINOTEMP. If the unit requires repair, re-pack it in the original shipping carton and return it to the factory, shipping prepaid. VINOTEMP will not accept COD shipments. If the unit

is determined to be faulty and is within the twelve month warranty period VINOTEMP will, at its discretion, repair or replace the unit and return it free of charge to the original retail customer. If the unit is found to be in good working order, or beyond the initial twelve month period, it will be returned freight collect.

2. Limitation of Implied Warranty

VINOTEMP'S SOLE LIABILITY FOR ANY DEFECTIVE PRODUCT IS LIMITED TO, AT OUR OPTION, REPAIRING OR REPLACING OF UNIT.

VINOTEMP SHALL NOT BE LIABLE FOR:
DAMAGE TO OTHER PROPERTY CAUSED BY ANY DEFECTS IN THE UNIT, DAMAGES BASED UPON INCONVENIENCE, LOSS OF USE OF THE UNIT, LOSS OF TIME OR COMMERCIAL LOSS, ANY OUTER DAMAGES, WHETHER INCIDENTAL, CONSEQUENTIAL OR OTHERWISE.

THIS WARRANTY IS EXCLUSIBE AND IS IN LIEU OF ALL OTHER WARRANTIES, EXPRESSED OR INPLIED, INCLUDING BUT NOT LIMITED TO, IMPLIED WARRANTIES OF MERCHANTABILITY OR FITNESS FOR A PARTICULAR PURPOSE.

While great effort has been made to provide accurate guidelines VINOTEMP cannot warrant its units to properly cool a particular enclosure. Customers are cautioned that enclosure construction, unit location and many other factors can affect the operation and performance of the unit. There for suitability of the unit for a specific enclosure or application must be determined by the customer and cannot be warranted by VINOTEMP.